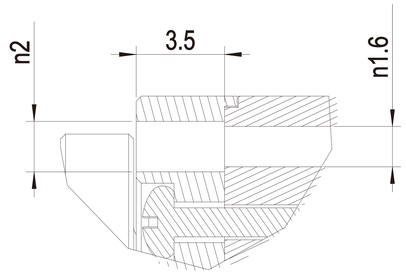

"Detail A"

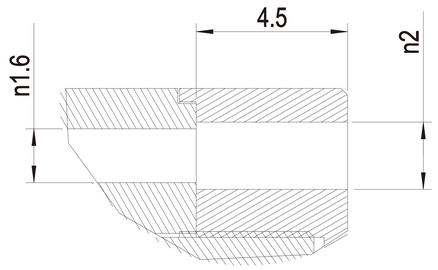

"Detail B"

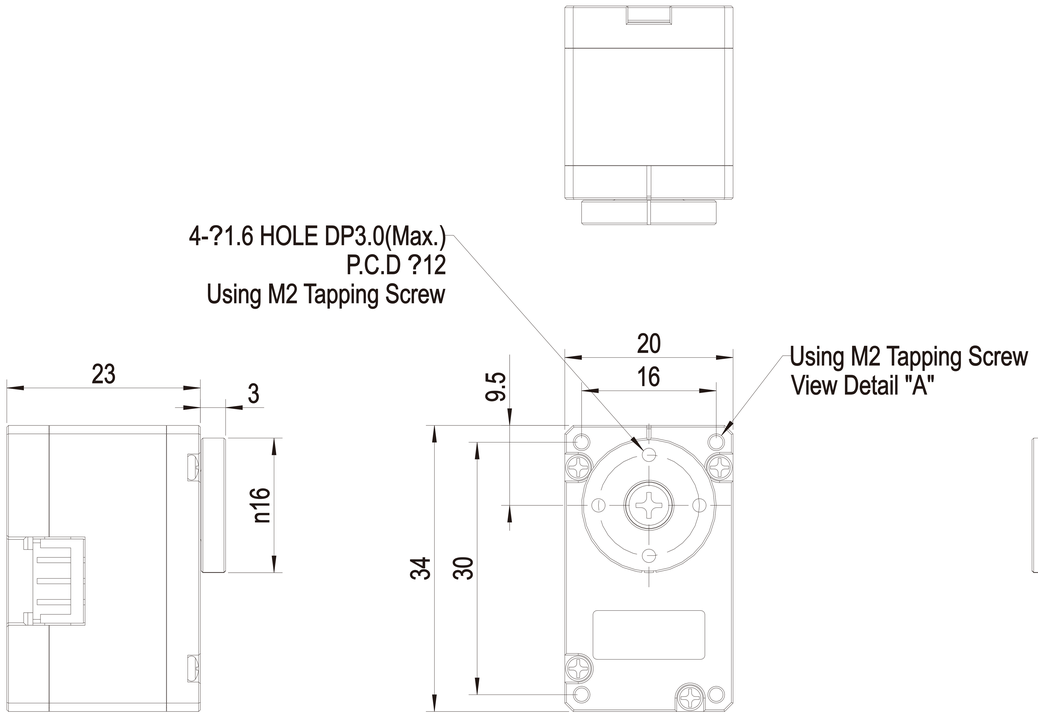

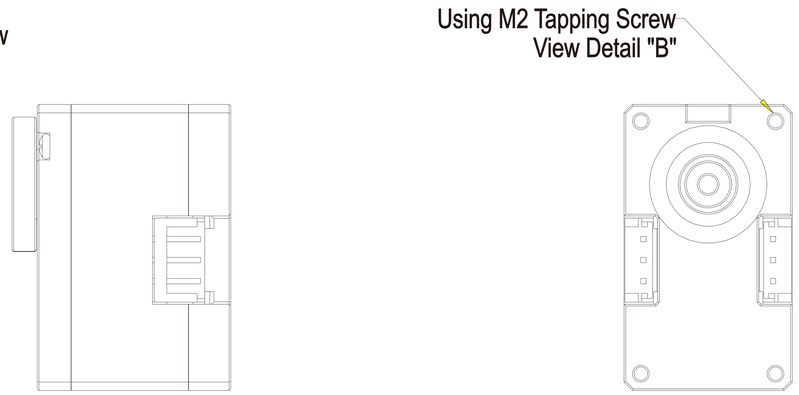

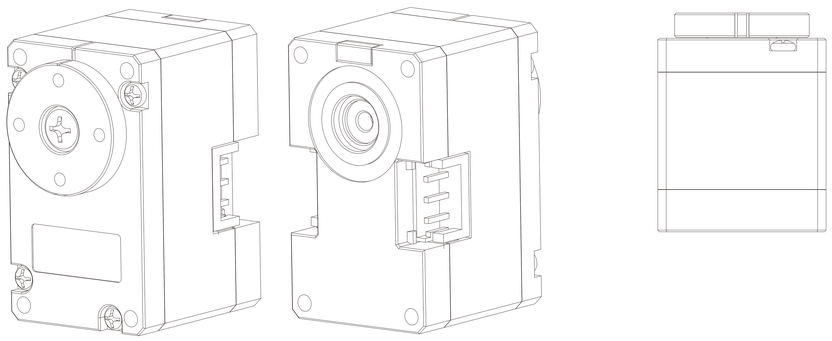

[X330 IDLER]

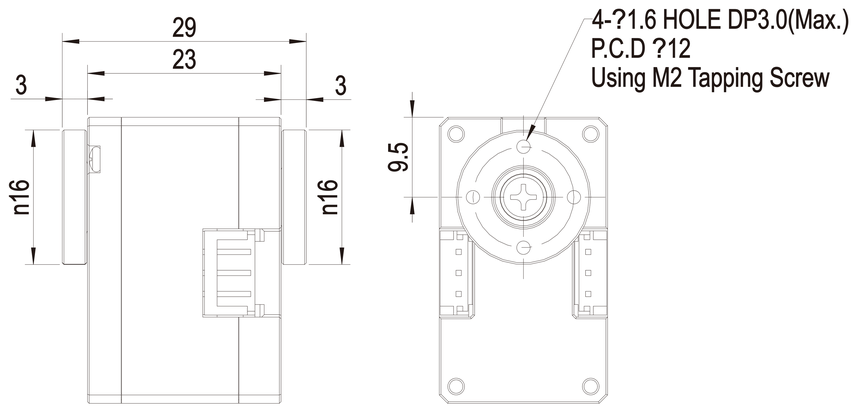

REV.	DESCRIPTION	CHK	DATE

[FOR REFERENCE ONLY]

X330	Material	Scale	Unit	Sheet	ROBOTIS
28-May-20		Nonescale	mm	1 of 1	A4